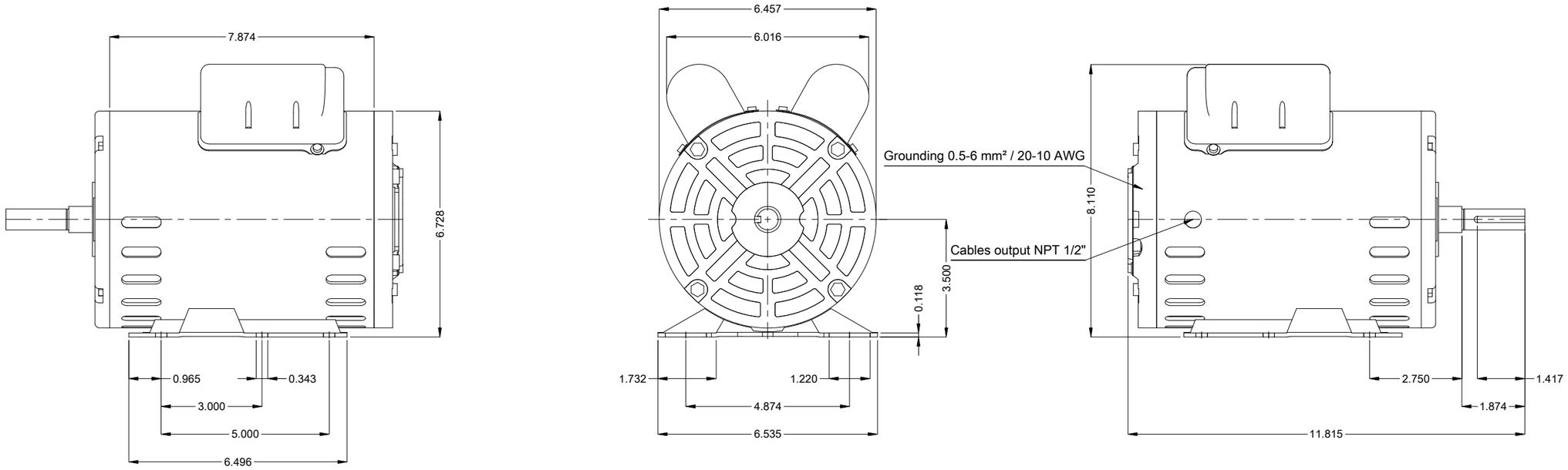

DE Shaft End

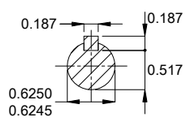

Reinforce the foot with 2 mig welding spots

Mounting MARKET F-1/B3R(D)

Mounting F-1/B3R(D)

2 HP 02 Poles 60 Hz | A

Scale 2 : 7

ECM	LOC	SUMMARY OF MODIFICATIONS	EXECUTED	CHECKED	RELEASED	DATE	VER
			HYBRISUSER				00

EXECUTED	HYBRISUSER	SINGLE PH. MOTOR ROLLED STEEL COMPRESSOR DUTY
CHECKED		FRAME 56H IP21 ODP
RELEASED		
REL. DATE		

PREVIEW

WDD 00

SHEET 1 / 1

Dimensions in inches

A3

WEG's property. Forbidden reproduction without previous authorization.