EIXO/SHAFT	
PADRÃO/STANDARD	
OPCIONAL/OPTIONAL	
ESPECIAL/SPECIAL	X

Dimensões em polegada
Dimensions in inches

CERTIFIED WEG MOTORES
Certified document.
Not subject to changes.

THIS IS AN UPDATED REVISION, THE PREVIOUS ONE MUST BE DISREGARDED.

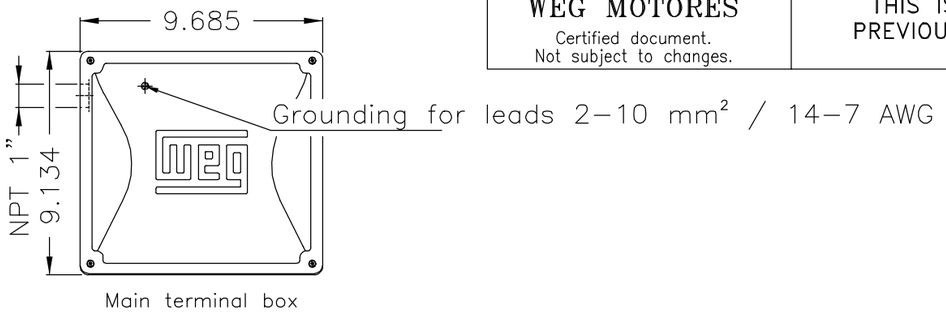

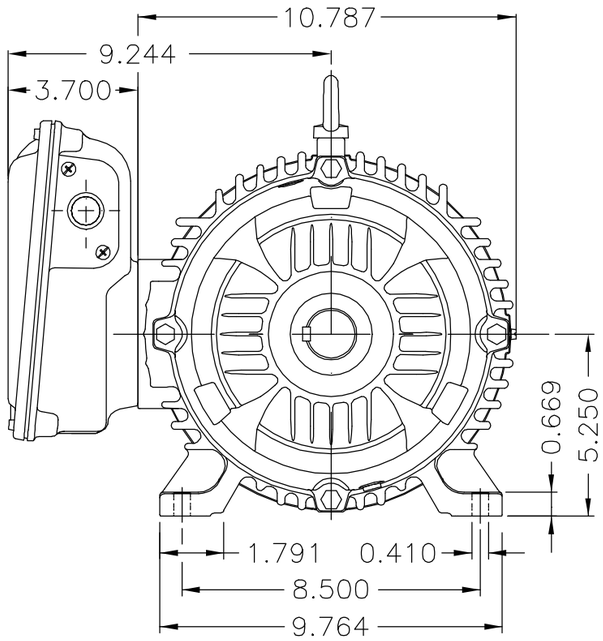

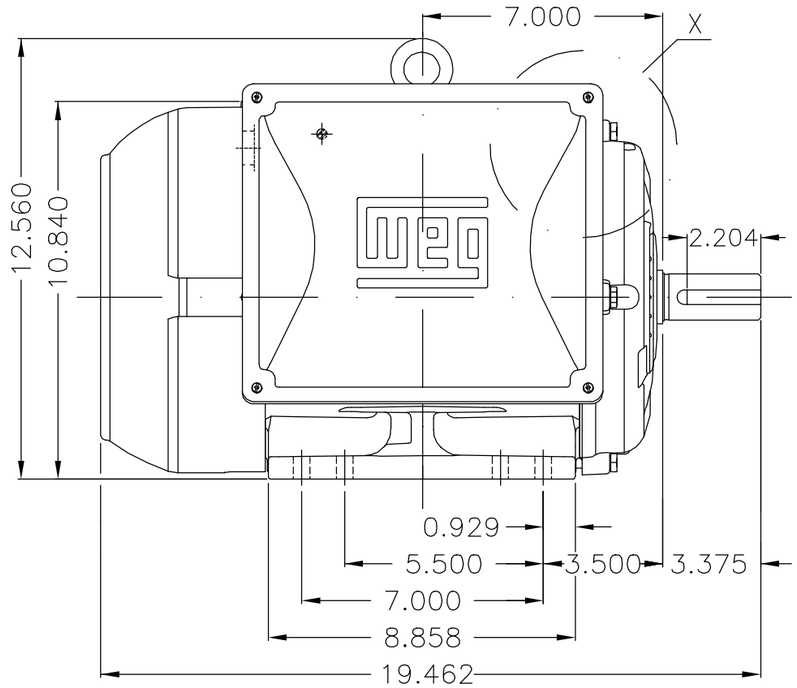

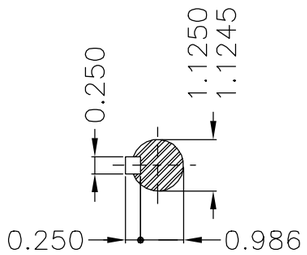

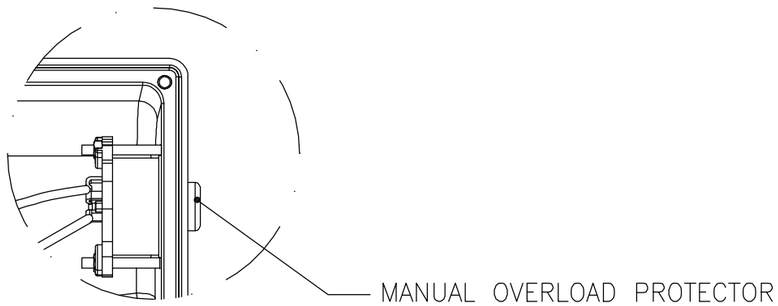

DETAIL X

Forma construtiva NEMA F-1 / Mounting NEMA F-1
Forma construtiva B3D / Mounting B3R(D)

WEG ELECTRIC CORPORATION - WEC

ECM	LOC	SUMMARY OF MODIFICATIONS	EXECUTED	CHECKED	RELEASED	DATE	VER
500001523935		ADICIONADO PROT. TÉRM. FENÓLICO MANUAL	SANDRESSA	TIAGOZ	TIAGOZ	08.11.2018	01
500001523225		DOCUMENTO NOVO	SANDRESSA	TIAGOZ	TIAGOZ	07.11.2018	00

EXECUTED	SANDRESSA	SINGLE PHASE MOTOR W22 FARM DUTY NEMA FRAME 213/5TZ IP55 TEFC	10006172195
CHECKED	TIAGOZ		000 01
RELEASED	TIAGOZ		
REL DT	07.11.2018	WMO Jaragua do Sul Product Engineering	SHEET 1 / 2

5 HP 04 Poles 60Hz 415254064

A

UNCONTROLLED COPY
RELEASED
ZME A3

WEG's property. Forbidden reproduction without previous authorization.