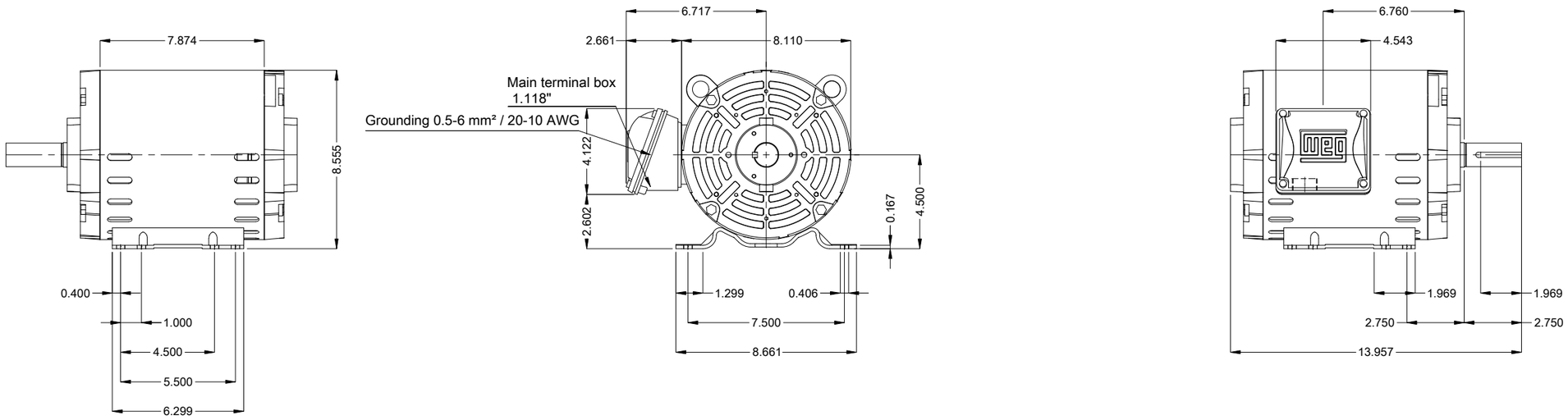

Color Munsell N 1 matte black

Painting plan 207N

Mounting MARKET F-1/B3R(D)

Mounting F-1/B3R(D)

DE Shaft End

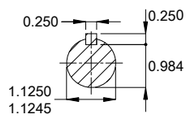

5 HP 02 Poles 60 Hz | A

Scale 1 : 6

ECM	LOC	SUMMARY OF MODIFICATIONS	EXECUTED	CHECKED	RELEASED	DATE	VER
			HYBRISUSER				00

EXECUTED	HYBRISUSER
CHECKED	
RELEASED	
REL. DATE	

THREE PH. MOTOR ROLLED STEEL NEMA PREM. EFF.
FRAME 182/4T IP21 ODP

PREVIEW

WDD 00

SHEET 1 / 1

Dimensions in inches

A3

WEG's property. Forbidden reproduction without previous authorization.